Algebra 2 Notes Name: Key

Section 10.4 - Hyperbolas

DAY ONE:

What would happen if you pulled the two foci of an ellipse so far apart that they moved outside the ellipse? The result would be a hyperbola, another conic section. A hyperbola is the set of fixed points $P(x,y)$ in a plane such that the difference of the distances from P to two fixed points F_1 and F_2, the foci, is Constant. For a hyperbola, $d = |PF_1 - PF_2|$, where d is the constant distance.

As the graphs in the following table show, a hyperbola contains two symmetrical parts, called branches.

A hyperbola also has two axes of symmetry. The transverse axis of symmetry contains the vertices and, if it were extended, the foci of the hyperbola. The Vertices of the hyperbola are the endpoints of the transverse axis.

The Conjugate axis of symmetry separates the two branches of the hyperbola. The Co-vertices of a hyperbola are the endpoints of the Conjugate axis. The transverse axis is NOT always longer than the conjugate axis.

Standard Form for the Equation of a Hyperbola with Center at $(0,0)$		
Major Axis	Horizontal	Vertical
Equation	$\frac{x^2}{a^2} - \frac{y^2}{b^2} = 1$	$\frac{y^2}{a^2} - \frac{x^2}{b^2} = 1$
Vertices	$(a,0)$ and $(-a,0)$	$(0,a)$ and $(0,-a)$
Foci	$(c,0)$ and $(-c,0)$	$(0,c)$ and $(0,-c)$
Co-vertices	$(0,b)$ and $(0,-b)$	$(b,0)$ and $(-b,0)$
Asymptotes	$y = \pm\frac{b}{a}x$	$y = \pm\frac{a}{b}x$
Graph	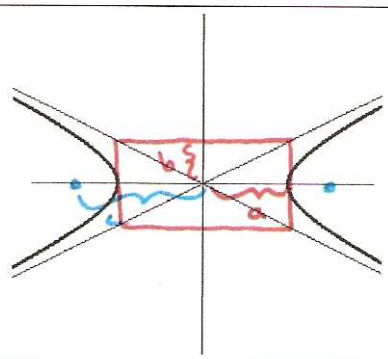	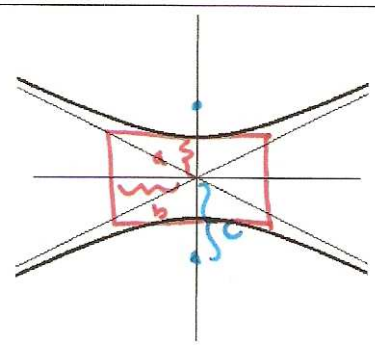

The standard form of the equation of a hyperbola depends on whether then hyperbola's transverse axis is horizontal or vertical. The values of a, b, and c are related by the equation $c^2 = a^2 + b^2$. Also note that the length of the transverse axis is 2a and the length of the conjugate axis is 2b.

Example 1: Graph each hyperbola. Find the foci and the asymptotes as well, please. ☺

a. $\frac{x^2}{9} - \frac{y^2}{4} = 1$ center $(0,0)$

$a=3$ $b=2$

Vertices: $(\pm 3, 0)$

Co-Vertices: $(0, \pm 2)$

Foci: $(\pm 3.6, 0)$

Asymptotes: $y = \pm \frac{2}{3}x$

$c^2 = a^2 + b^2$

$c^2 = 9 + 4$

$c^2 = 13$

$c \approx \pm 3.6$

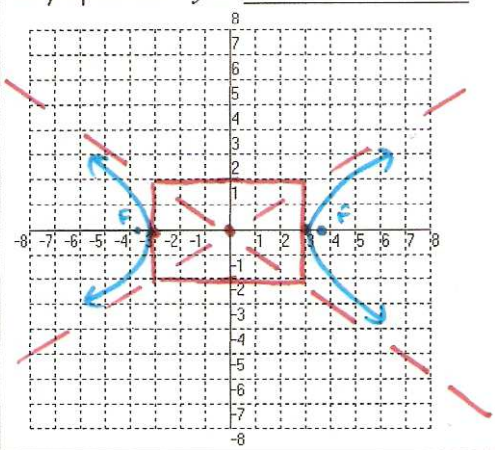

b. $\frac{36y^2 - 25x^2}{900} = 900$

$\frac{y^2}{25} - \frac{x^2}{36} = 1$

$a=5$ $b=6$ center $(0,0)$

Vertices: $(0, \pm 6)$

Co-Vertices: $(\pm 5, 0)$

Foci: $(0, \pm 7.8)$

Asymptotes: $y = \pm \frac{5}{6}x$

$c^2 = a^2 + b^2$

$c^2 = 25 + 36$

$c^2 = 61$

$c \approx \pm 7.8$

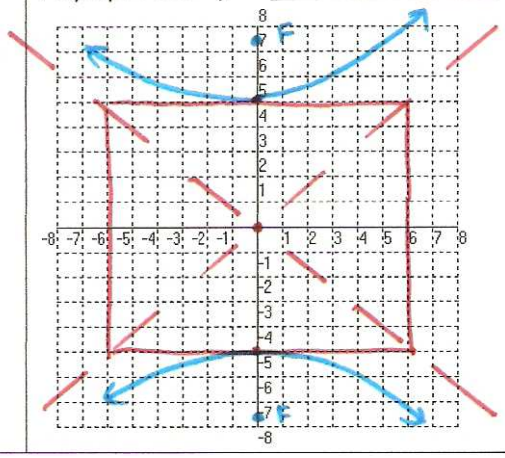

As with circles and ellipses, hyperbolas do not have to be centered at the origin.

Standard Form for the Equation of a Hyperbola with Center at (h,k)

Major Axis	Horizontal	Vertical
Equation	$\frac{(x-h)^2}{a^2} - \frac{(y-k)^2}{b^2} = 1$	$\frac{(y-k)^2}{a^2} - \frac{(x-h)^2}{b^2} = 1$
Vertices	$(h+a,k)$ and $(h-a,k)$	$(h,k+a)$ and $(h,k-a)$
Foci	$(h+c,k)$ and $(h-c,k)$	$(h,k+c)$ and $(h,k-c)$
Co-vertices	$(h,k+b)$ and $(h,k-b)$	$(h+b,k)$ and $(h-b,k)$
Asymptotes	$y = \pm\frac{b}{a}(x-h)+k$	$y = \pm\frac{a}{b}(x-h)+k$

Example 2: Graph each hyperbola. Find the foci and the asymptotes as well, please. ☺

a. $\frac{(x-2)^2}{16} - \frac{(y+3)^2}{9} = 1$ center $(2,-3)$

$a=4$ $b=3$

$c^2 = a^2 + b^2$

$c^2 = 25$

$c = \pm 5$

Vertices: $(6, -3)$ & $(-2, -3)$

Co-Vertices: $(2, 0)$ & $(2, -6)$

Foci: $(7, -3)$ & $(-3, -3)$

Asymptotes: $y = \pm \frac{3}{4}(x-2) - 3$

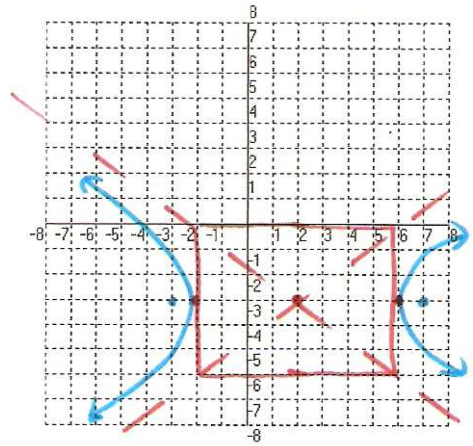

b. $\frac{(y-2)^2}{9} - \frac{(x+1)^2}{4} = 1$ center $(-1, 2)$

$a = 3$ $b = 2$

$c^2 = a^2 + b^2$

$c^2 = 13$

$c \approx \pm 3.6$

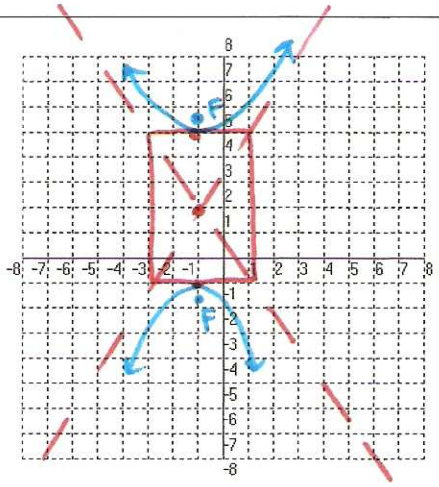

Vertices: (−1 , 5) & (−1 , −1)

Co-Vertices: (1 , 2) & (−3 , 2)

Foci: (−1 , 5.6) & (−1 , −1.6)

Asymptotes: $y = \pm \frac{3}{2}(x+1) + 2$

DAY TWO:

Example 3: Write the equation of each hyperbola in standard form.

a.

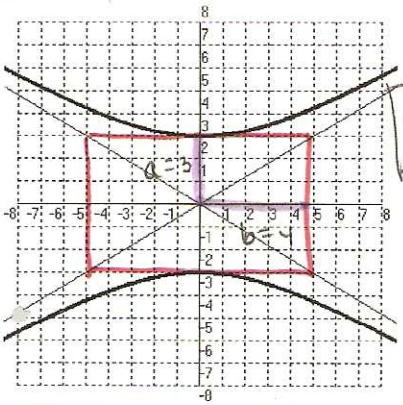

center $(0, 0)$

$\boxed{\frac{y^2}{9} - \frac{x^2}{16} = 1}$

b.

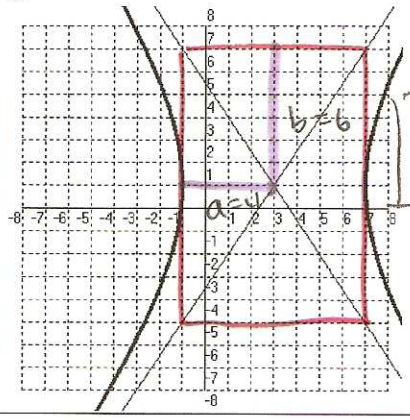

center $(3, 1)$

$\boxed{\frac{(x-3)^2}{16} - \frac{(y-1)^2}{36} = 1}$

Example 4: Write an equation in standard form for each hyperbola with center at $(0,0)$.

a. center $(0,0)$, vertex $(0,12)$, and focus $(0,20)$

$a = 12$ $c = 20$

$c^2 = a^2 + b^2$

$400 = 144 + b^2$

$b^2 = 256$

$\boxed{\frac{y^2}{144} - \frac{x^2}{256} = 1}$

b. center $(0,0)$, vertex $(0,9)$, and co-vertex $(7,0)$

$b = 7$ $a = 9$

$\boxed{\frac{y^2}{81} - \frac{x^2}{49} = 1}$

c. center $(0,0)$, vertex $(8,0)$, and focus $(10,0)$

$a = 8$ $c = 10$

$c^2 = a^2 + b^2$

$100 = 64 + b^2$

$b^2 = 36$

$\boxed{\frac{x^2}{64} - \frac{y^2}{36} = 1}$

d. center $(0,0)$, vertex $(4,0)$, and co-vertex $(0,10)$

$b = 10$ $a = 4$

$\boxed{\frac{x^2}{16} - \frac{y^2}{100} = 1}$